Tork PeakServe®
Continuous Hand Towel
Dispenser

Elevation
Design

H5



www.torkglobal.com

Tork PeakServe® Continuous Hand Towel

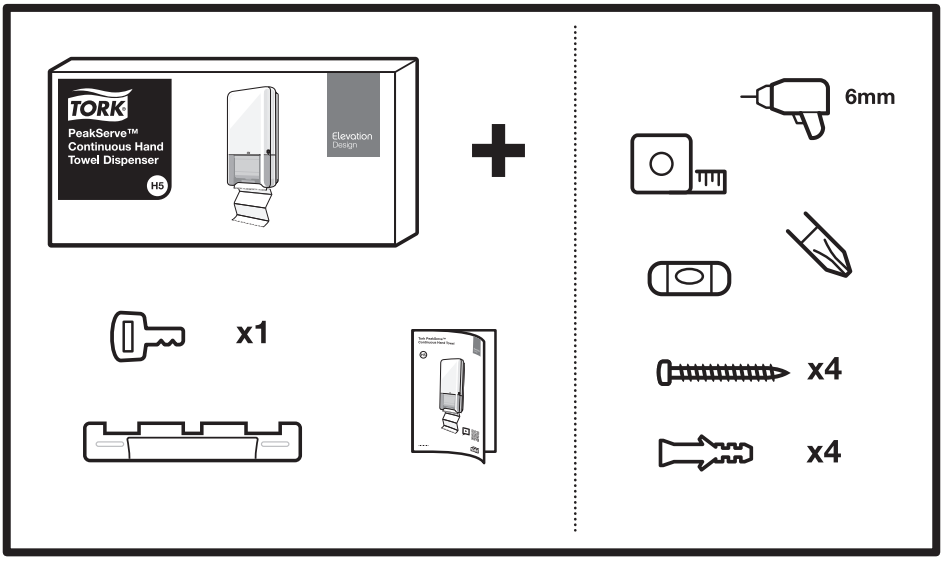

1

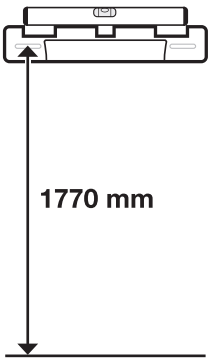

2

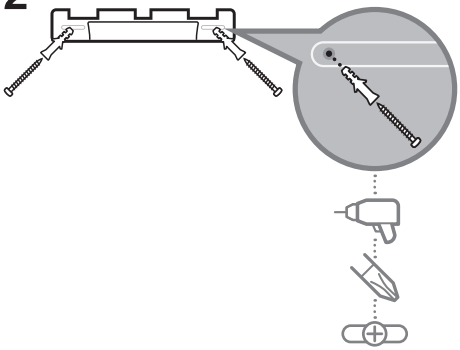

3

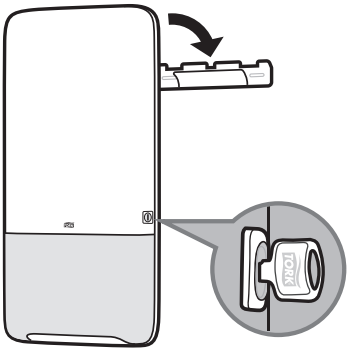

4

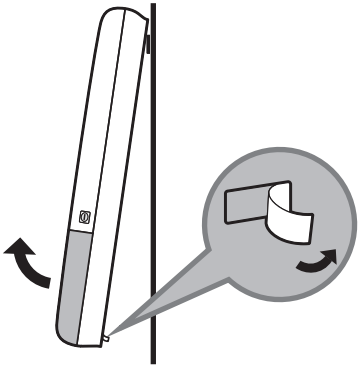

5

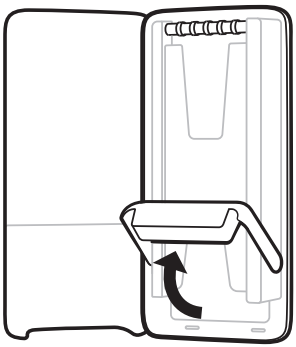

6

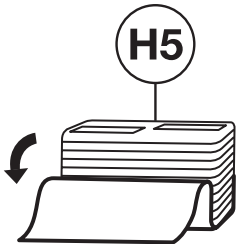

7

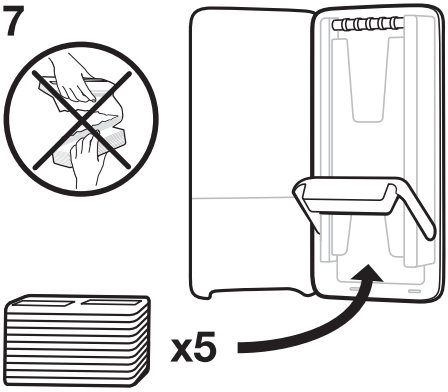

8

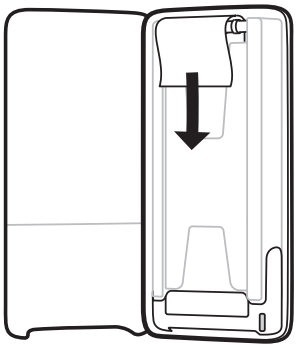

9

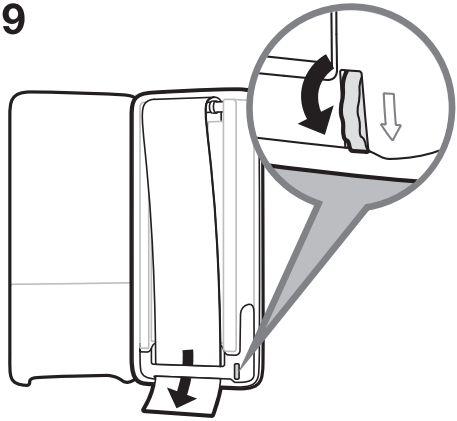

10

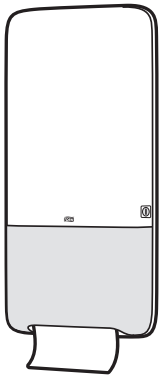

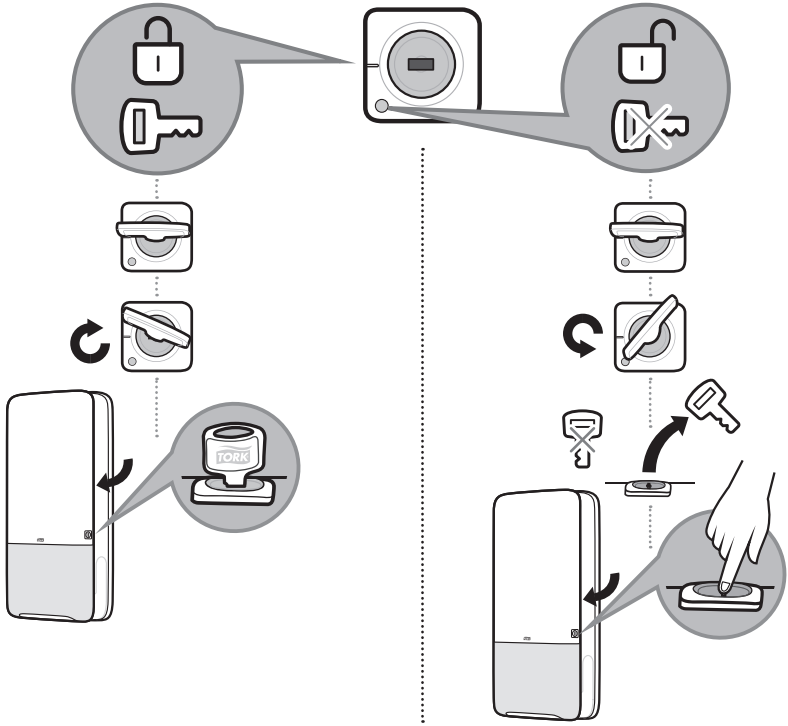

Disposal

- **Damaged or malfunctioning product should be disposed of immediately to avoid potential of injury**
- **Products should be disposed of in accordance with applicable regulations**

Cleaning instructions

- Clean dispenser with mild detergent and soft cloth

essity

Manufactured by Essity Hygiene and Health AB
SE-40503 Göteborg, Sweden
Visiting address: Mölndals Bro 2, Mölndal
www.essity.com, www.torkglobal.com
Made in Poland
Patents/Brevets/Patentes: www.essity.com/patents

Essity UK Limited
Southfields Road, Dunstable,
Bedfordshire, LU6 3EJ, UK