Tork 50 litre Bin

Elevation
Design

B1



TORK®

Think ahead.



- Clean dispenser with mild detergent and soft cloth.



- Damaged or malfunctioning product should be disposed of immediately to avoid potential of injury.
- Products should be disposed of in accordance with applicable regulations.

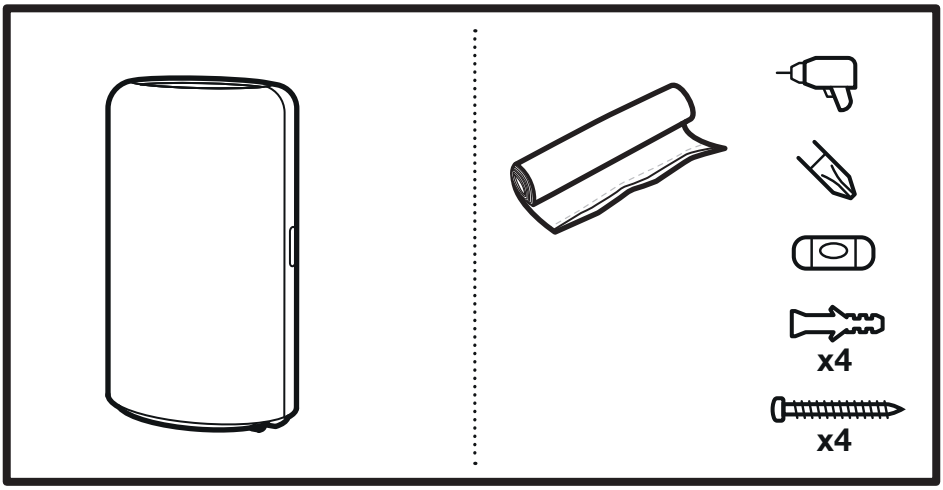
x4
x4



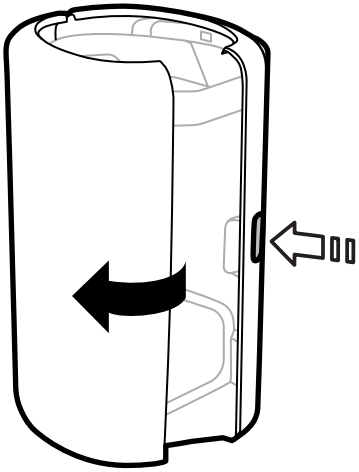

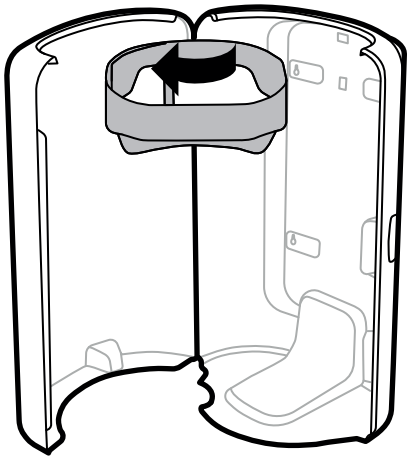

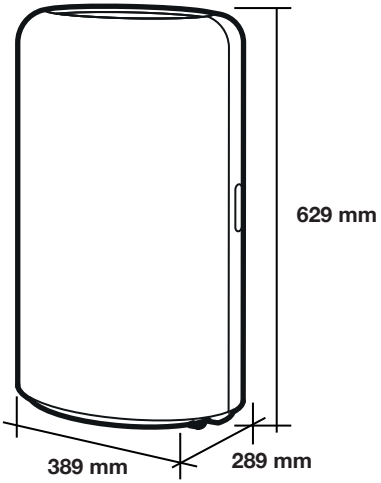

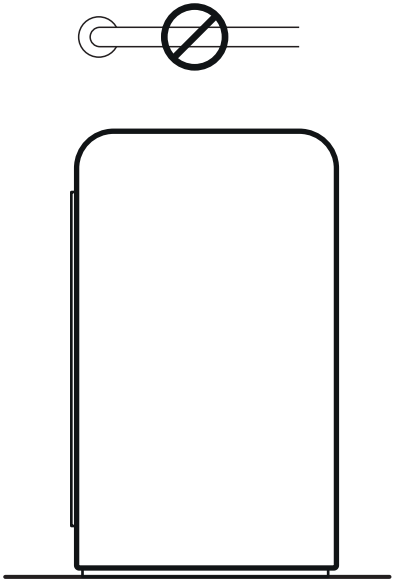

Alt 1

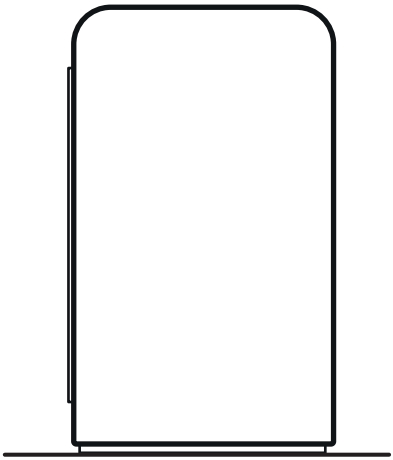

Alt 2

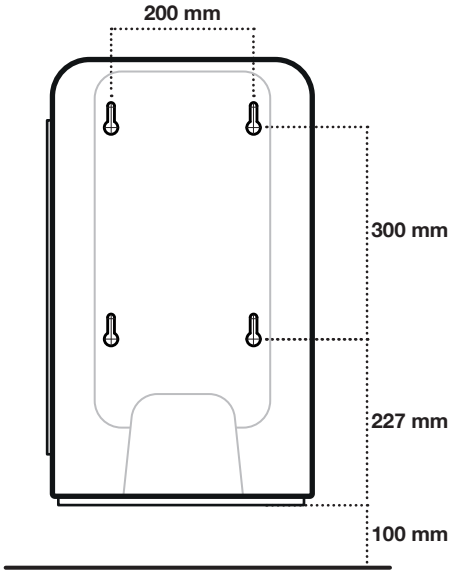

1

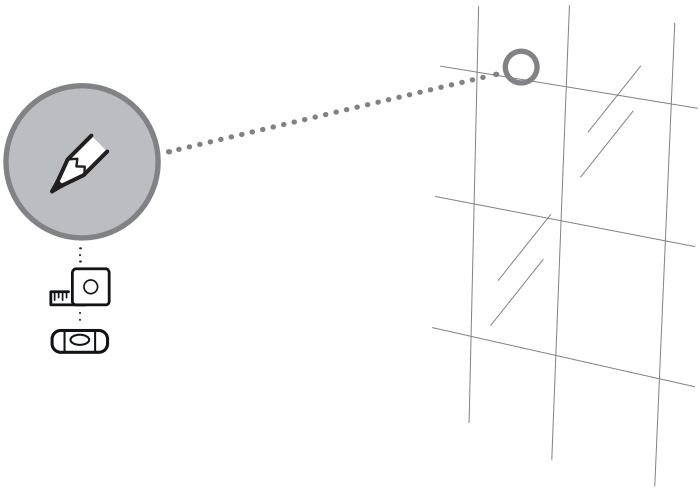

2

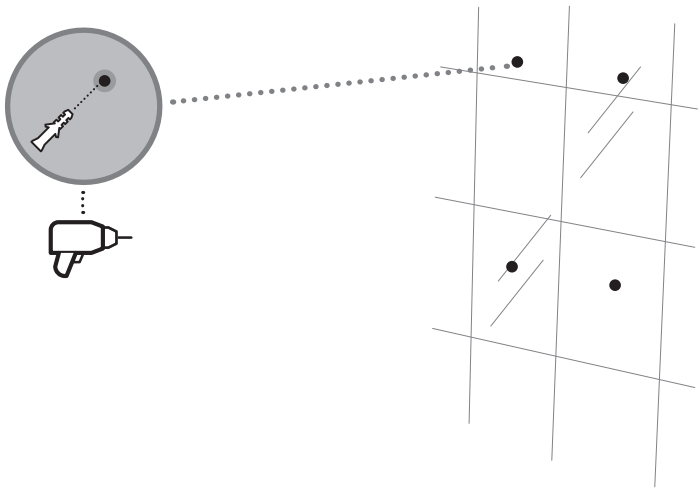

3

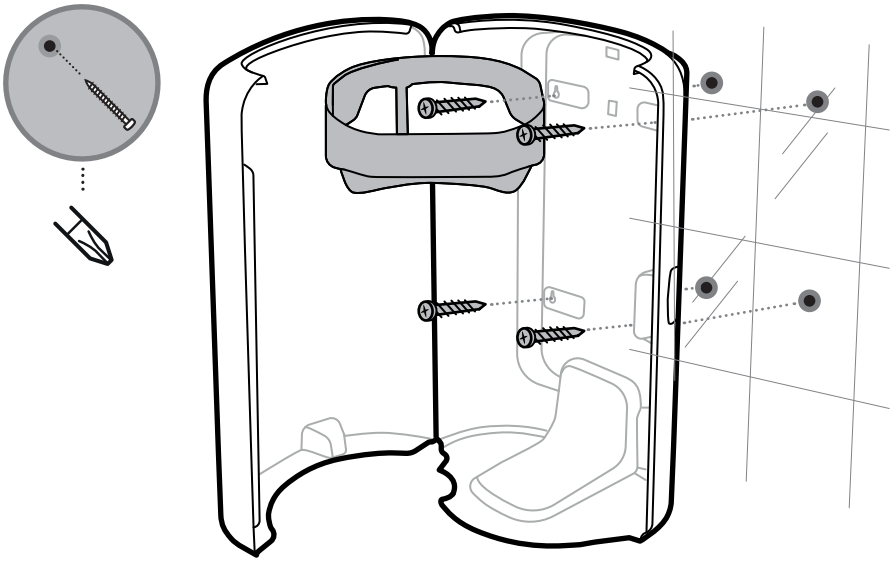

1

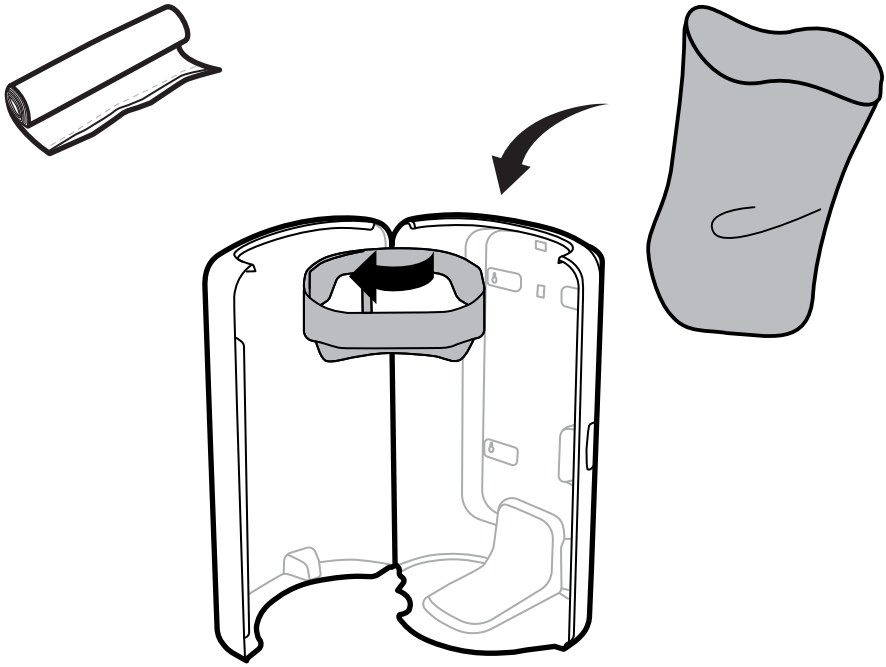

2



3

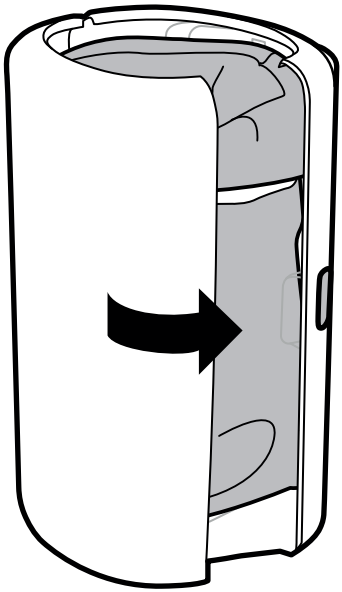

essity

Manufactured by Essity Hygiene and Health AB
SE-40503 Göteborg, Sweden
Visiting address: Mölndals Bro 2, Mölndal
www.essity.com, www.torkglobal.com
Made in Poland
Patents/Brevets/Patentes: www.essity.com/patents